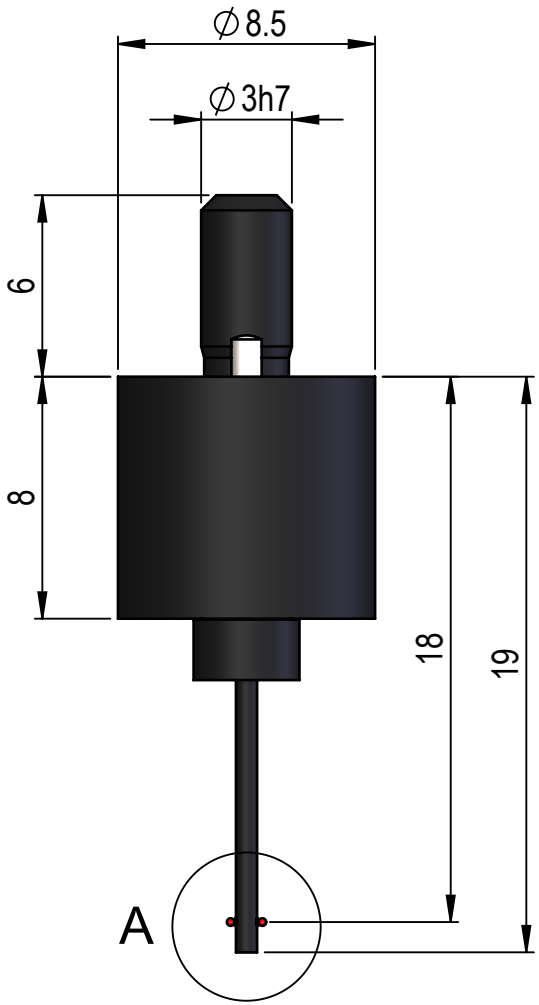

A (12 : 1)

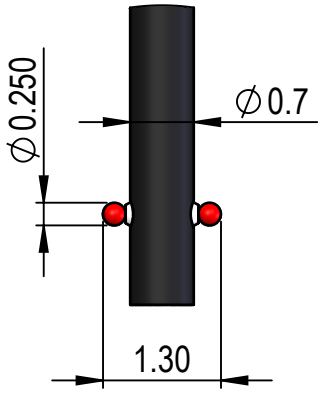

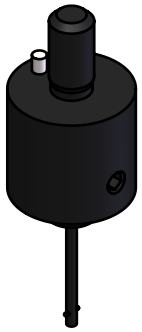

(2:1)

IMT	Size 0-250 90°	Scale 4:1 mm