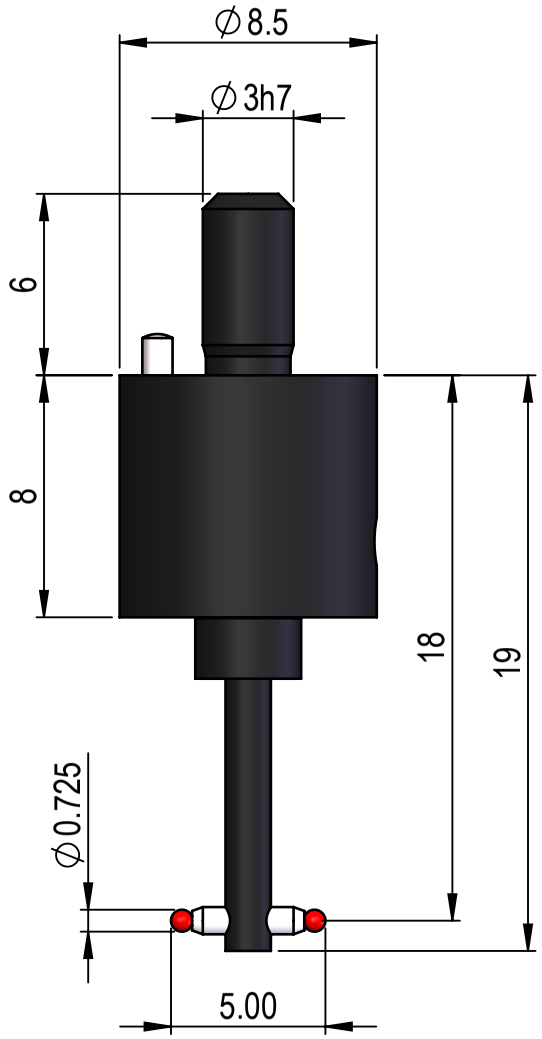

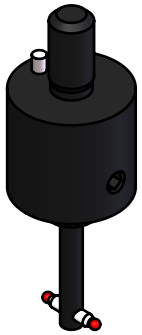

(2:1)

Size 4 parallel

Scale
4:1

mm