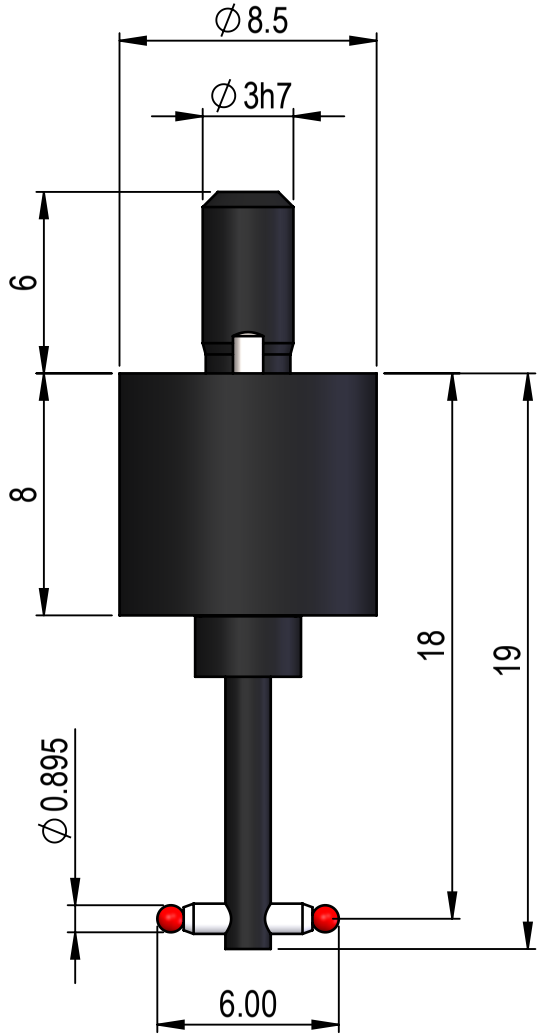

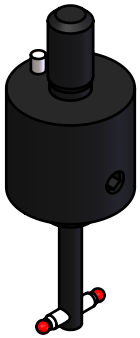

(2:1)

Size 5 90°

Scale
4:1

mm