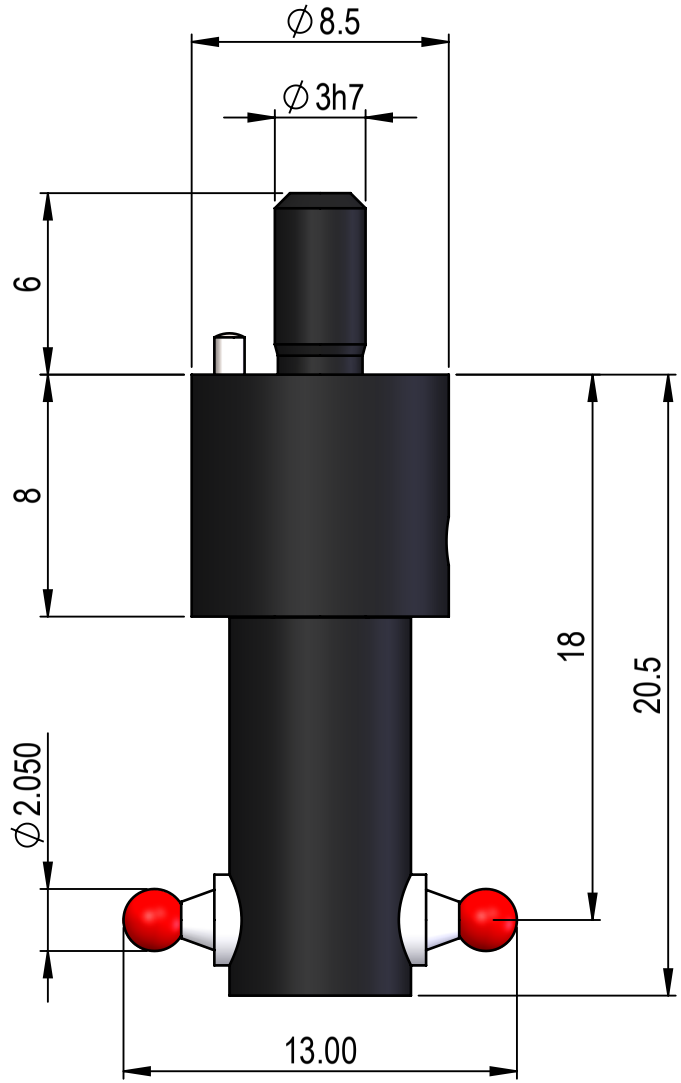

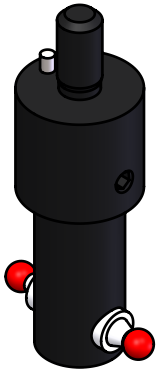

(2:1)

Size 9 parallel

Scale
4:1

mm